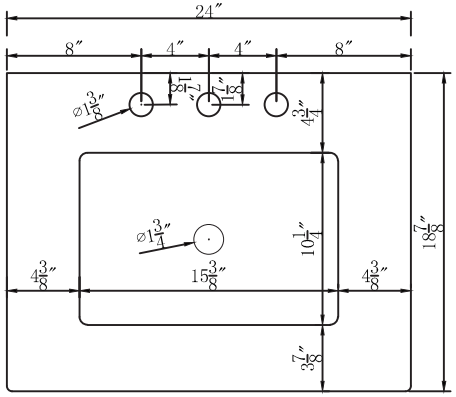

Top view

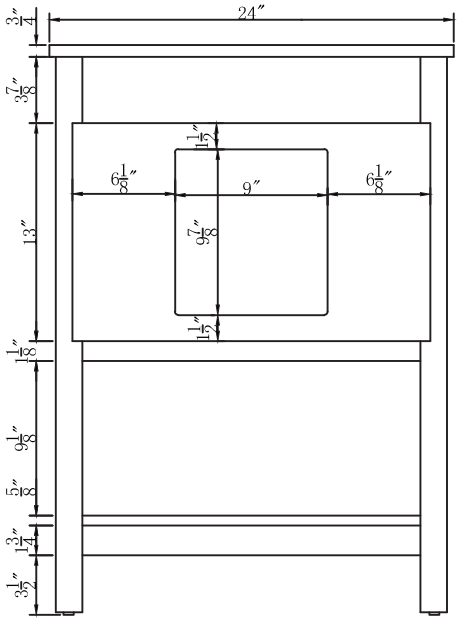

Back view

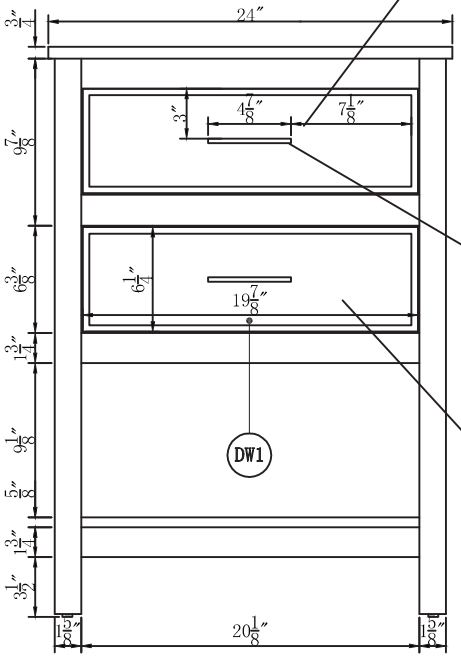

Front view

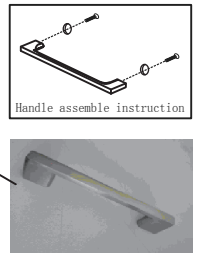

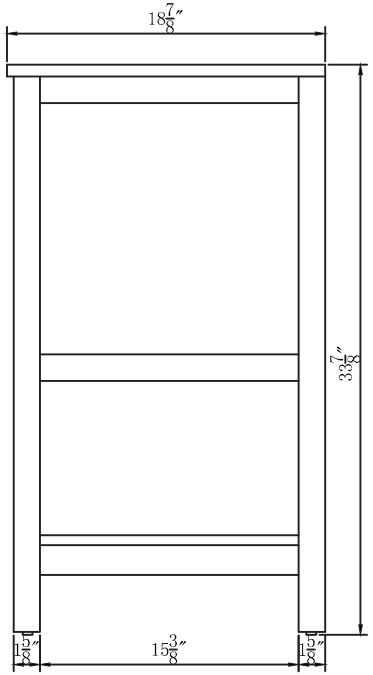

Side view

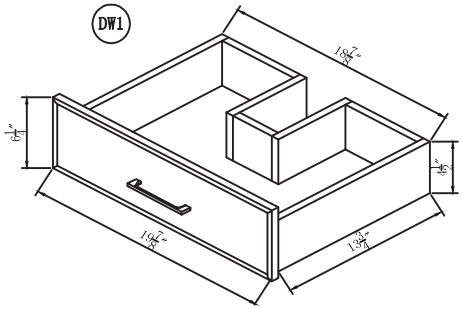

Drawer Interior Size

DWG. NO.:	
MODEL NO.:	VF19024GR
ALTERATIONS	
1	
2	
3	
4	
FOR PROPOSAL ONLY ALL DIMENSIONS TO BE VERIFIED	
SCALE:	
DWG. BY:	
CHECKED BY:	
DATE:	
PROJECT:	
Qty:	
Color:	
DRAWING TITLE:	
FINISH:	

Elegant

Decor

ELEGANT LIGHTING